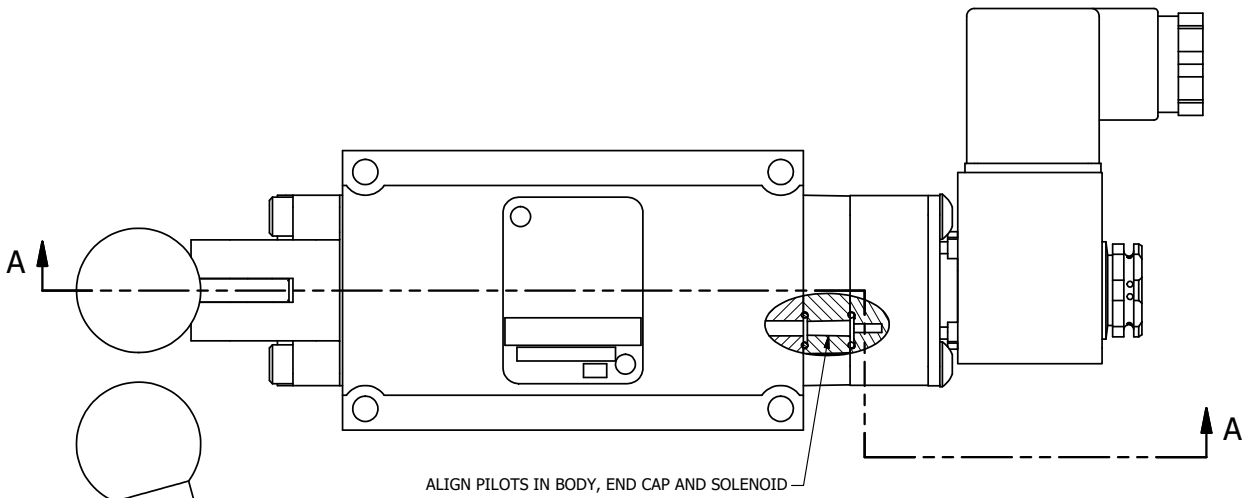

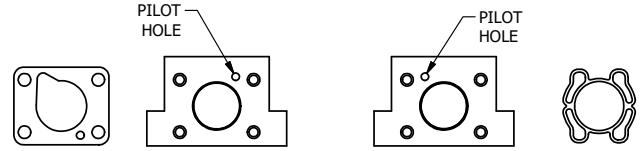

POSITION GASKET TO SEAL PILOT HOLE SIDE 'B' ONLY.

ALIGN PILOT AND SLOT IN ADAPTOR WITH GASKET IN BETWEEN SIDE 'A' ONLY FOR EXTERNAL PILOT OPERATION - ROTATE ADAPTOR 180 DEGREES. REMOVE 1/8" NPTF PLUG AND SUPPLY 50-150 PSI TO 1/8" NPTF PILOT PORT IN ADAPTOR.

NOTES:
1) ALWAYS GIVE VALVE MODEL AND PART NUMBER WHEN ORDERING PARTS.
2) FOR DIFFERENT VOLTAGES OTHER THAN 120/60, REPLACE SOLENOID COIL WITH COIL LISTED IN TABLE BELOW.

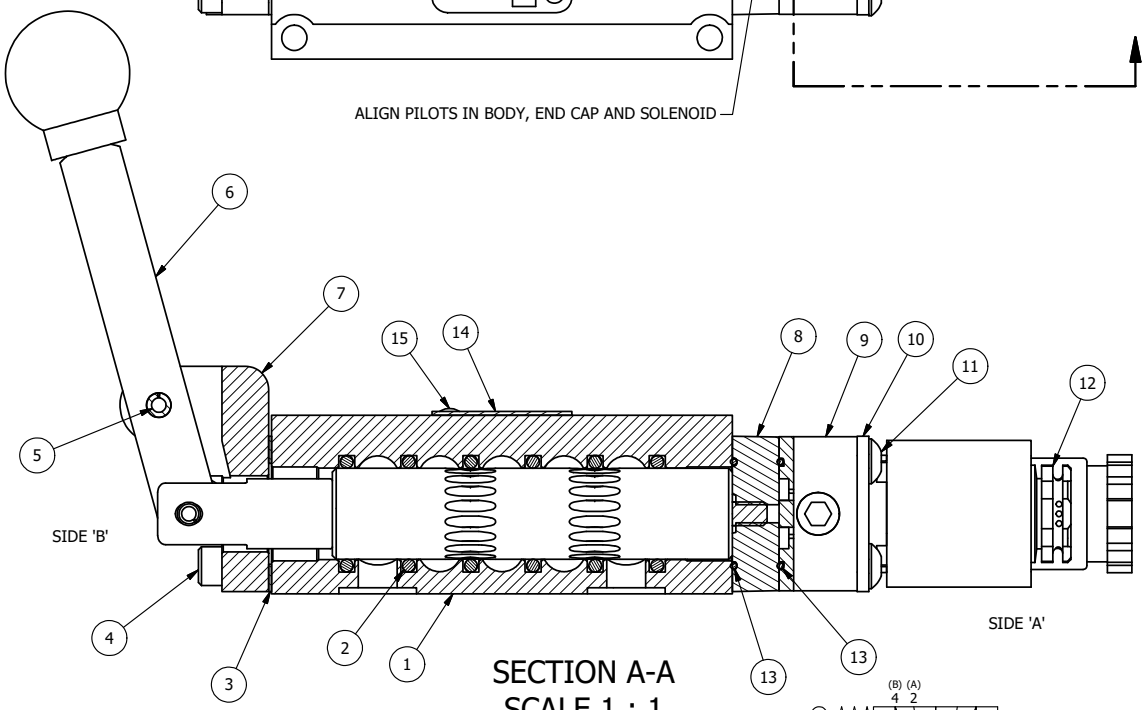

SECTION A-A
SCALE 1 : 1
VIEW FROM 3 PORT SIDE

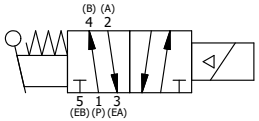

FLG	QTY	PART NO	DESCRIPTION
16	1	SPK-3	KIT - SUBPLATE MOUNTING, 3/8" SUBPLATE VALVES
15	2	V-212	SCREW, #2 X 3/16 DRIVE, TYPE U, OVAL HEAD, STAINLESS STEEL
14	1	AN-114	NAMEPLATE, BLANK, FOR VALVES WITH SPRINGS OR DETENTS
13	2	EMG3	GASKET - END MOUNT SOLENOID, BUNA-N, 1/4" & 3/8" VALVES
12	1	V-562	NUT, SOLENOID, SIDE EXHAUST
11	4	V-601	SCREW, 10-24 X 1-1/2, BUTTON HEAD SOCKET CAP WITH MICROSPHERE ADHESIVE
10	1	SEC3-7	PLATE, RE-INFORCEMENT, SOLENOID, STAMPED, 304 STAINLESS
9	1	V-564	SYSTEM 8 INTRINSICALLY SAFE SOLENOID OPERATOR.
8	1	AY-ESAH3	ASSY - NO DETENT, RTRN TO POS C, END MNT SOL W/HANDLE OVRD, 1/4" & 3/8" VALVES
7	1	HE3-1	END CAP, LEVER, 380 AL, 1/4" & 3/8" VALVE
6	1	HL3-24	HAND LEVER WITH KNOB, 1/4" & 3/8" VALVE
5	1	V-7	PIN, ROLL 3/16 X 11/16, STEEL, FOR 1/4 THRU 1/2" HAND,FT & CAM V
4	4	V-38	SCREW, 10-24 X 3/4, SOCKET HEAD CAP
3	1	ECG3	GASKET - END CAP, 1/4" & 3/8" VALVE
2	6	V-39	O-RING, VITON, STD BODY, 1/4" & 3/8" VALVES
1	1	BP3-1E	BODY - SOLID, BUTTON BLEEDER, ANODIZED, 3/8" SUBPLATE VALVE

LIMITS ON DIMENSIONS UNLESS OTHERWISE SPECIFIED
2-PL DECIMAL ± .01
3-PL DECIMAL ± .005
FRACTIONAL ± 1/64
ANGULAR ± 1/2'

AAA PRODUCTS INTERNATIONAL
7114 Harry Hines Blvd
Dallas, TX 75235

DRAWN: RMcKenna	DATE: 4/12/2021	CHECKED: KWaite	DATE: 4/12/2021
SCALE: 1 : 1	SHEET: 1 OF 1	RELEASED: HWomack	DATE: 4/12/2021

TITLE: 3/8" SUBPLATE, SNGL SOL, 2 POS, SPR RTRN, INTR SAFE, 24VDC, LEVER ASSIST, SIDE VENT

PART NO.: ESAH3PAC 24VDC

REV.:

THE INFORMATION CONTAINED WITHIN THIS DOCUMENT IS PROPRIETARY TO AAA PRODUCTS AND MAY NOT BE DISCLOSED WITHOUT PRIOR WRITTEN CONSENT

D:\Engineering\Product\Valves\Assembly\Standard\ESAH3\DWG\ESAH3PAC 24VDC.dw